Strategic Considerations When Dealing With Organizational Plaintiffs in the Title II Context

International Municipal Lawyers Association
October 29, 2007
Nashville, TN

ulmer | berne | llp
ATTORNEYS

William D. Edwards

© 2007 Ulmer & Berne

I.Coming To A Courtroom Near You …



DISABILITY RIGHTS ORGANIZATIONS as PLAINTIFFS

Frequent, active litigation by organizations against businesses & government entities alleging violations of Title III / Title IIof the ADA

Frequently Appearing as a Plaintiff in ADA Litigation:_

FLORIDA /OHIO/CALIFORNIA

Disabled Patriots of America
Access 4 All
Advocates for the Disabled
Disability Advocacy and Access Network, Inc.
Access for America
Access for the Disabled
Alliance for ADA Compliance
ADA Compliance Group
Association for Disabled Americans, Inc.
Barrier Free Access 4 All
Disabled Americans for Equal Access
Access Now
Accessibility for All _

© 2007 Ulmer & Berne

Access Now, Inc. Web Site: Shopping for Plaintiffs?

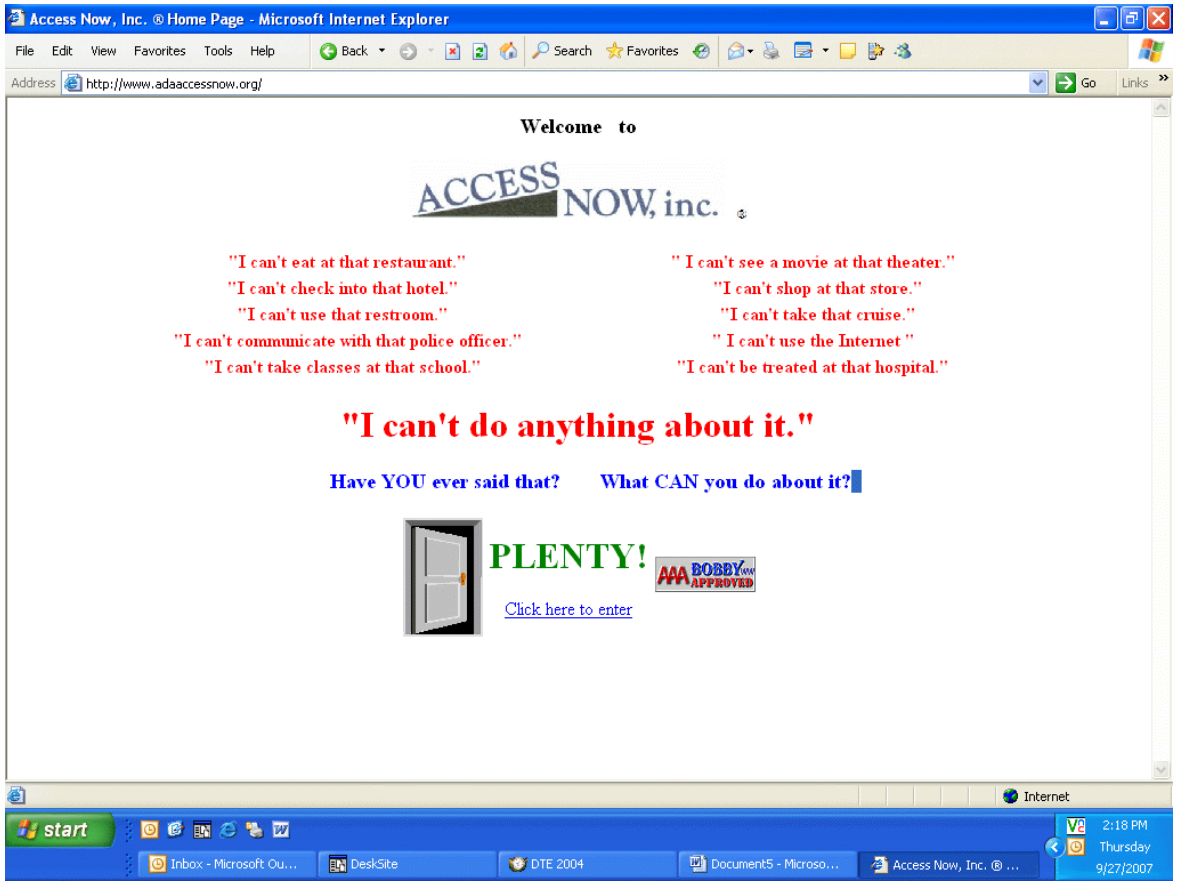

© 2007 Ulmer & Berne

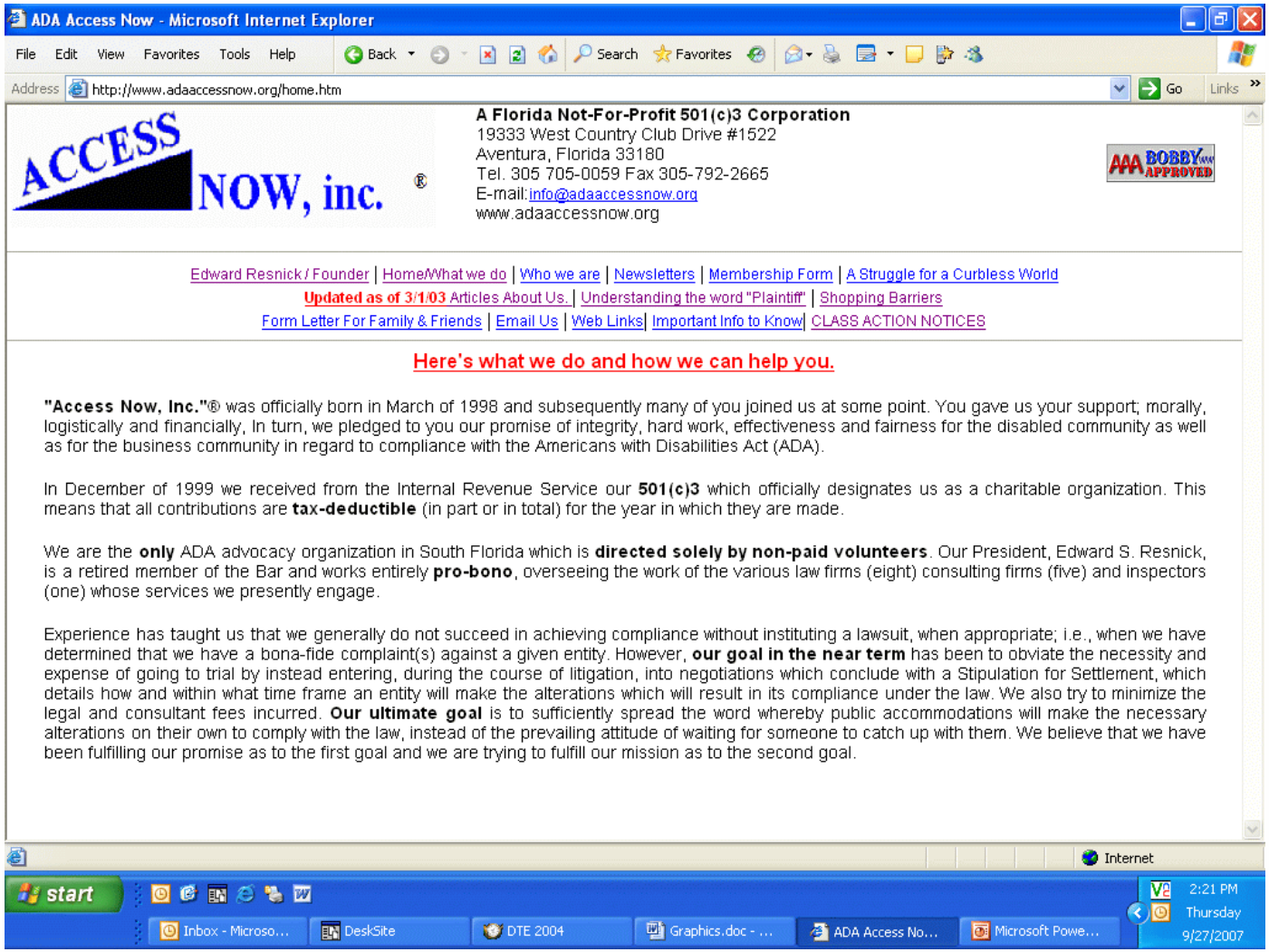
ADA Access Now - Microsoft Internet Explorer
File Edit View Favorites Tools Help
Back Search Favorites
Address http://www.adaaccessnow.org/home.htm
Go Links
ACCESS NOW, inc.
A Florida Not-For-Profit 501(c)3 Corporation
19333 West Country Club Drive #1522
Aventura, Florida 33180
Tel. 305 705-0059 Fax 305-792-2665
E-mail:info@adaaccessnow.org
www.adaaccessnow.org
AAA BOBBY APPROVED
Edward Resnick / Founder | Home/What we do | Who we are | Newsletters | Membership Form | A Struggle for a Curbless World
Updated as of 3/1/03 Articles About Us. | Understanding the word "Plaintiff" | Shopping Barriers
Form Letter For Family & Friends | Email Us | Web Links | Important Info to Know | CLASS ACTION NOTICES
Here's what we do and how we can help you.
"Access Now, Inc."® was officially born in March of 1998 and subsequently many of you joined us at some point. You gave us your support; morally, logistically and financially, In turn, we pledged to you our promise of integrity, hard work, effectiveness and fairness for the disabled community as well as for the business community in regard to compliance with the Americans with Disabilities Act (ADA).
In December of 1999 we received from the Internal Revenue Service our 501(c)3 which officially designates us as a charitable organization. This means that all contributions are tax-deductible (in part or in total) for the year in which they are made.
We are the only ADA advocacy organization in South Florida which is directed solely by non-paid volunteers. Our President, Edward S. Resnick, is a retired member of the Bar and works entirely pro-bono, overseeing the work of the various law firms (eight) consulting firms (five) and inspectors (one) whose services we presently engage.
Experience has taught us that we generally do not succeed in achieving compliance without instituting a lawsuit, when appropriate; i.e., when we have determined that we have a bona-fide complaint(s) against a given entity. However, our goal in the near term has been to obviate the necessity and expense of going to trial by instead entering, during the course of litigation, into negotiations which conclude with a Stipulation for Settlement, which details how and within what time frame an entity will make the alterations which will result in its compliance under the law. We also try to minimize the legal and consultant fees incurred. Our ultimate goal is to sufficiently spread the word whereby public accommodations will make the necessary alterations on their own to comply with the law, instead of the prevailing attitude of waiting for someone to catch up with them. We believe that we have been fulfilling our promise as to the first goal and we are trying to fulfill our mission as to the second goal.
Internet
start
Inbox - Microso...
DeskSite
DTE 2004
Graphics.doc - ...
ADA Access No...
Microsoft Powe...
2:21 PM
Thursday
9/27/2007


ADA Access Now - Microsoft Internet Explorer
File Edit View Favorites Tools Help
Back Search Favorites
Address http://www.adaaccessnow.org/plaintiff.htm
Go Links
ACCESS NOW, inc.
A Florida Not-For-Profit 501(c)3 Corporation
19333 West Country Club Drive #1522
Aventura, Florida 33180
Tel. 305 705-0059 Fax 305-792-2665
E-mail: info@adaaccessnow.org
www.adaaccessnow.org
AAA BOBBY APPROVED
Edward Resnick / Founder | Home/What we do | Who we are | Newsletters | Membership Form | A Struggle for a Curbless World
Updated as of 3/1/03 Articles About Us. | Understanding the word "Plaintiff" | Shopping Barriers
Form Letter For Family & Friends | Email Us | Web Links | CLASS ACTION NOTICES
On our membership form there is a place where you can check if you are interested in learning more about being a Plaintiff. This is written to explain what that involves in order to clarify against whom that might be and what would be entailed.
First of all, as a Plaintiff you would incur no liability whatsoever. It is possible that the Defendant's attorney would want to take your deposition, but there are no charges to you for that. As for the possibility of having to appear in Court, while that is possible, it is highly unlikely, as we have so far not had to take any of our many cases to trial, having been successful in settling them out of court. In any case, you incur no charges whatsoever.
As to whom the Defendant might be against whom you might be a Plaintiff, that could be any place where you feel that you have been discriminated against by virtue of inaccessibility problems, etc.
In particular, we are engaged in the monumental task of curing inaccessibility problems with hospitals, other kinds of medical facilities, regional and national department stores and cruise ships, as well as all other places of public accommodation, including City and County Governmental buildings.
If you use or have used the services of any of the hospitals in your area you could conceivably be a Plaintiff in one of our hospital cases. In addition, you could conceivably be a Plaintiff in any hospital to which you would most likely be taken in case of a 911 call (obviously, we would hope that you would never be in need of that kind of emergency care!)
If you shop at any department store or regional or national chain store, or if you frequent fast-food stores, or if you attend movie theaters, if you stay at a hotel or motel, if you like to take cruises, etc., etc., etc., you could conceivably be a Plaintiff. The possibilities are almost endless, as unfortunately, there are so many places which are not obeying the A.D.A. laws and which are therefore creating a variety of inaccessibility problems for lots of people!
Internet
start
Inbox - Micr... DeskSite DTE 2004 ADA Access... #1664637v... John D. Mal... The ADA Sh...
3:02 PM
Thursday
9/27/2007

Counsel Representing ADA Plaintiffs: Repeat Players



- Lawrence Fuller, Esq.
- Guy Shir, Esq.
- Todd Shulby, Esq.
- John Mallah, Esq.

© 2007 Ulmer & Berne

Increasing Number of Title III and Title II Suits Filed Nationwide

1. Florida
   - *Thousands* of cases filed over past several years on behalf of individual and organizational plaintiffs
   - Shulby has filed *over 600 cases* in the Southern District of Florida alone
   - *The National Law Journal* reported that, from 1999 to 2001, Mallah filed ADA complaints against more than 700 Florida businesses
2. Ohio
   - First case filed by Disabled Patriots of America in Northern District of Ohio in March 2004
   - From March 2004 to September 2007, Disabled Patriots filed 68 more cases


The New York Times

Wal-Mart Is Found Liable in Bias Against Disabled Man

Worker and his lawyer beat Wal-Mart and its huge firm

A winning long shot

New York Law Journal

Verdicts & Settlements

© 2007 Ulmer & Berne

II. Lessons learned from Title III

Title III: original focus of individuals and advocacy organizations filing suit under ADA

- Title III imposes an affirmative duty:
  - To remove architectural barriers in existing facilities where such removal is readily achievable;
  - To build new facilities in accordance with the ADA; and
  - To construct any alterations of existing facilities so that, to the maximum extent feasible, the altered portions of the facility are readily accessible to and usable by individuals with disabilities.



Prabhu Dontamsetti, general manager of the Best Western Yacht Harbor Inn in Dunedin, Florida, shows the features in the bathroom of a handicapped accessible room
St. Petersburg Times, Online, March 24, 2002, available at http://www.sptimes.com/2002/03/24/State/Big_winners_in_disabl.shtml

© 2007 Ulmer & Berne

A.Facility Accessibility



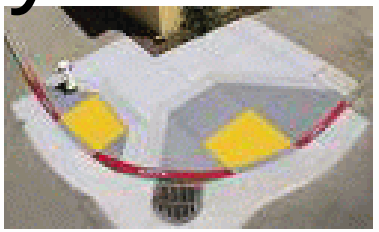





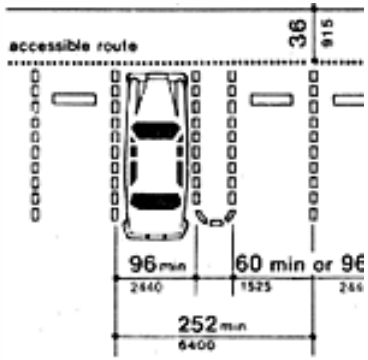



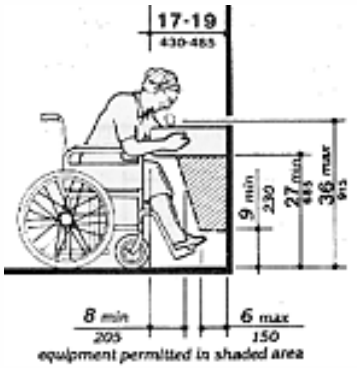

© 2007 Ulmer & Berne

B.New Trend: Title II of the ADA

- Title II prohibits discrimination by state and local government agencies

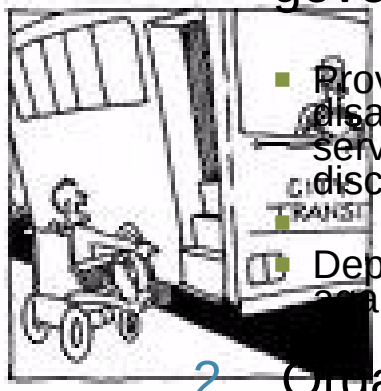

  - Provides that "no qualified individual with a disability shall, by reason of such disability, be excluded from participation in or be denied the benefits of the services, programs, or activities of a public entity, or be subjected to discrimination by any such entity"
  - Department of Justice promulgates regulations to implement the prohibitions against discrimination

2. Organizations filing Title II and Rehabilitation Act claims

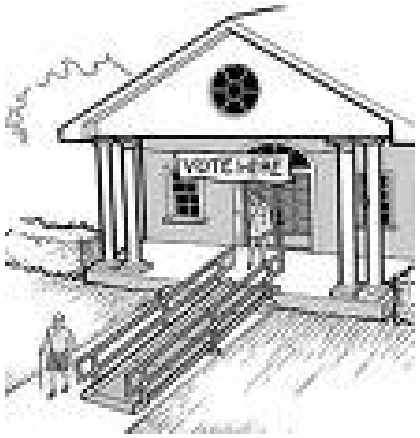

C.Responding to Complaint: Motion for a More Definite Statement



- Form complaint / often vague & non-specific
- Rule 8 pleading requirements
- not onerous, but defendant is entitled
- to fair notice of plaintiff's claims
- Courts agree that plaintiff must plead the
- nature of his/her disability (motion for
- more definite statement will likely be granted
- to extent plaintiff fails to do so)
- Degree of specificity with which plaintiffs must plead barriers encountered? Courts disagree.

© 2007 Ulmer & Berne

D.Standing



1. Procedural Threshold

- Courts have dismissed plaintiffs (organizational and/or individual) based on lack of standing

  1. "Injury-in-fact"—a "concrete and particularized" invasion of a legally protected interest that is "actual or imminent;"

  2. Causality—a causal connection between the defendant's conduct and the injury; and

  3. Redressability—it must be "likely," not merely "speculative," that the injury will be redressed by a favorable decision.

- (*Lujan v. Defenders of Wildlife*, 504 U.S. 555, 560-61 (1992))

© 2007 Ulmer & Berne

Standing (continued)

2. Redressability: Risk of Future Injury



- For there to be "redressability," plaintiffs seeking injunctive relief must show that there is some chance of future injury.
- The mere fact that one has been injured in the past is insufficient "if unaccompanied by any continuing, present adverse effects." (*City of Los Angeles v. Lyons*, 461 U.S. 95, 102 (1983))
- This rule "is based on the obvious proposition that a prospective remedy will provide no relief for an injury that is, and likely will remain, entirely in the past." (*Am. Postal Workers Union v. Frank*, 968 F.2d 1373, 1376 (1st Cir. 1992))

3.Injury in Fact: Imminent, Not Speculative

-
- Plaintiffs must show that the future injury is "imminent"
- Merely stating an intent to return to places visited before is insufficient unless accompanied by "concrete plans"
- (*Lujan v. Defenders of Wildlife*, 504 U.S. 555, 564 (1992))

© 2007 Ulmer & Berne

Standing (continued)

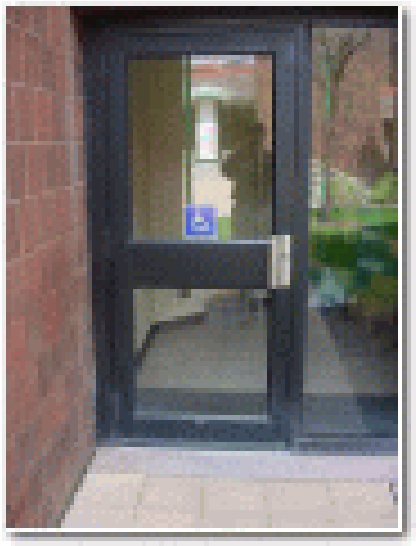

4. Requires Showing That Plaintiff Is Likely to Revisit the Facility & Encounter the Same Barriers Again

Inconsistent treatment by courts

- For example, NO STANDING in the following instances:
  - Plaintiff unlikely to re-visit out-of-town hotel
    - (*Rosenkrantz v. Markopoulos*, 254 F. Supp. 2d 1250, 1253 (M.D. Fla. 2003) (disabled traveler lacked standing to sue motel owner for failure to comply with the ADA where traveler lived hundreds of miles away from motel, traveled only twice a year, had been to area only once before, and claimed that he "may" travel to the area in the next year or two))
  - Plaintiff unlikely to visit maternity ward in hospital because not pregnant / claims too contingent & premature
    - (*McInnis-Misenor v. Me. Med. Ctr.,* 319 F.3d 63, 68-69 (1st Cir. 2003))

© 2007 Ulmer & Berne

Standing (continued)



CF. YES, STANDING:

- Mere statement by plaintiff of intent to return is enough
- Held: A single past incident of discrimination can provide grounds for a plaintiff's standing as long as the lack of accommodation continues to exist (*Parr v. L & L Drive-Inn Rest.*, 96 F. Supp. 2d 1065, 1077-82 (D. Haw. 2000) (standing exists, even though plaintiff visited the restaurant only once, because obstacles to disabled persons persist))
- Rationale:
  - Continuing nature of alleged violation means there is a sufficient chance of imminent future injury, and/or
  - Actual and present injury because disabled individuals are currently deterred from visiting facility due to the continuing discriminatory barriers to their access

© 2007 Ulmer & Berne

5.Application of Standing Requirements in Title II Context

No standing when plaintiffs' complaint only contained allegations of <u>past incidents</u> of discrimination

- *Shotz v.Cates, 256 F.3d 1077* (11th Cir. 2001)
  - No attempt to return to the courthouse since original visit in July 1999 / plaintiffs did not allege that they intended to do so in the future
  - No standing because "the likelihood of future discrimination remains 'conjectural, hypothetical, or contingent,' and not 'real and immediate'"

Cf. Tandy v. City of Wichita, 380 F.3d 1277 (10th Cir. 2004)

- Plaintiff had standing to maintain action against city transit system for inaccessible fixed-route bus system
- Bus passengers with disabilities
- specifically pled their intent to
- use bus system in the future



© 2007 Ulmer & Berne

6.Limits to Scope of Standing

Plaintiff may establish standing regarding:

- Accessibility violations related to the plaintiff's specific disability; AND
- Accessibility violations that the plaintiff personally encountered when s/he visited facility; AND



- (MOST COURTS) Include accessibility problems that are identified during the discovery process (expert inspection), even if never specifically encountered by plaintiff ("Futile Gesture" doctrine); OR
- (SOME COURTS) Limit scope of standing to accessibility violations that the plaintiff actually encountered when s/he visited facility only (and no standing for violations discovered during expert inspection of premises) (rare)
-
- *See Access Now, Inc. v. S. Fla. Stadium Corp.*, 161 F. Supp. 2d 1357, 1364-66 (S.D. Fla. 2001) (standing only for violations for which plaintiff had actual notice and personally encountered)

© 2007 Ulmer & Berne

7.“Futile Gesture” Doctrine

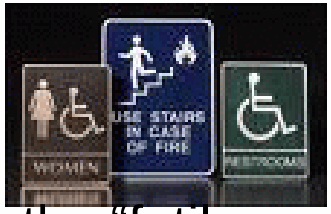

- A person with a disability need not engage in the “futile gesture” of attempting to enter a facility / encounter a barrier s/he knows is not accessible

- Practical effect: ADA plaintiff has standing to seek injunctive relief to remedy entire facility without having encountered every barrier within that facility

- (limited to barriers specific to his or her disability)

- *See, e.g.*, *Schonfeld v. City of Carlsbad*, 978 F. Supp. 1329, 1332 (S.D. Cal. 1997) (ADA plaintiff is not required to have “‘formally requested to use the facility” to establish Title II standing)

© 2007 Ulmer & Berne

8.Limits to Standing: Standing of Organization



Associational Standing

- "[I]f Resnick lacks standing so does Access Now."
  - *Access Now, Inc. v. S. Fla. Stadium Corp*., 161 F. Supp. 2d 1357, 1364-66 (S.D. Fla. 2001)
  - *See also Clark v. Burger King Corp.*, 255 F. Supp. 2d 334, 345 (D.N.J. 2003) (organization's standing limited to instances in which member who was named plaintiff encountered ADA violations during visit to restaurants)

© 2007 Ulmer & Berne

9.Standing of Organization to Sue in Own Right? Courts Disagree.

Organization must show that it suffered concrete and demonstrable injury to its activities, not merely a setback to abstract social interests (*Havens Realty Corp. v. Coleman*, 455 U.S. 363, 379 (1982))

- Yes, standing

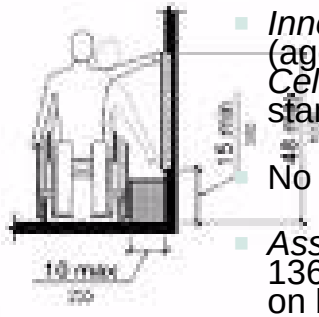

- *Innovative Health Sys., Inc. v. City of White Plains*, 117 F.3d 37, 48 (2d Cir. 1997) (agency had standing to assert ADA and Rehabilitation Act claims); *Rolland v. Cellucci*, 52 F. Supp. 2d 231, 241 (D. Mass. 1999) (holding that organizations had standing to bring ADA Title II claim, among others)
- No standing
- *Ass'n for Disabled Ams., Inc. v. Concorde Gaming Corp*., 158 F. Supp. 2d 1353, 1363-64 (S.D. Fla. 2001) (organization lacked standing "to maintain a separate claim on behalf of its members because 'any finding of an ADA violation requires proof as to each individual claimant'")

© 2007 Ulmer & Berne

III.Is There A Winning Strategy? Perhaps.

Application of *Buckhannon Bd. & Care Home, Inc*., 532 U.S. 598 (2001)

Pre-*Buckhannon*: "Catalyst Theory"

- Until *Buckhannon*, almost all of the federal circuits allowed the award of attorneys' fees based on the "catalyst theory"
- Plaintiff could recover fees as a prevailing party if the lawsuit brought about a voluntary change in the defendant's conduct
- Specifically, the plaintiff had to show: (1) a colorable claim; (2) the lawsuit was a substantial cause of the change in the defendant's conduct; and (3) the change in conduct was motivated by the threat of victory rather than to avoid expense

Buckhannon: "Prevailing Party" Status

- A "prevailing party" is entitled to recover attorneys' fees
- The U.S. Supreme Court limited the application of "prevailing party" to instances where the court awarded some form of damages, even if nominal, and to settlement agreements enforced through a consent decree
- Moot? Fix alleged violations to deprive plaintiff prevailing party status
- A case may not be mooted unless it is "absolutely clear that the allegedly wrongful behavior could not reasonably be expected to recur"

Practical Considerations When Dealing with *Buckhannon*

- Scope of the Repairs
- Cost Associated
- Time Needed to Remedy
- Race to the Finish Line

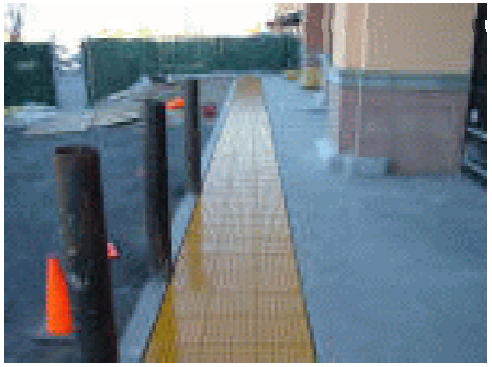

© 2007 Ulmer & Berne

IV.What Are They Seeking?



- **Remedies**
  - Declaratory and Injunctive Relief
  - Attorneys' Fees ("prevailing party"/*Buckhannon*)
  - Litigation Costs and Expenses (expert witness, travel expenses)
  - Compensatory Damages (infrequently sought / established)
    - Only in cases where there has been intentional discrimination
    - *Johnson v. City of Saline*, 151 F.3d 564, 573 (6th Cir. 1998); *Ferguson v. City of Phoenix*, 157 F.3d 668, 674 (9th Cir. 1998)

© 2007 Ulmer & Berne

V.Special Considerations WhenDealing with Title II Litigation

- No private right of action to enforce self- evaluation and transition plan regulations
- (*Ability Ctr. of Greater Toledo v. City of Sandusky*, 385 F.3d 901, 913-15 (6th Cir. 2004))
- Public entity not required to make every facility
- accessible (28 CFR 35.150)
- Additional federal regulations



© 2007 Ulmer & Berne

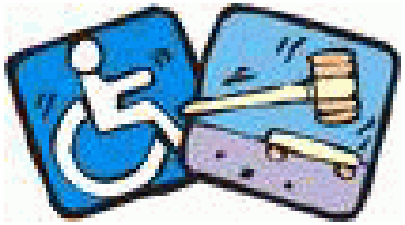

VI.Resolution

Consent Decree
Formal Settlement Agreement
Moot Claims (*Buckhannon*)

© 2007 Ulmer & Berne

William D. EdwardsUlmer & Berne, LLP(216) 583-7150wdedwards@ulmer.com

ulmer | berne | llp
ATTORNEYS

© 2007 Ulmer & Berne